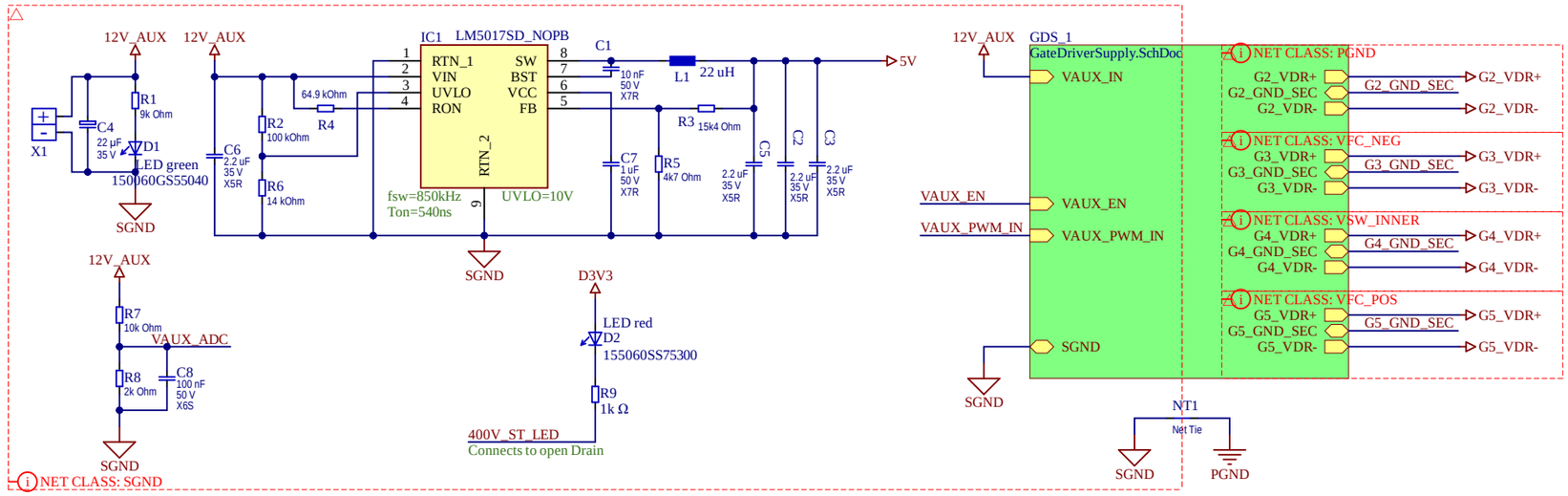

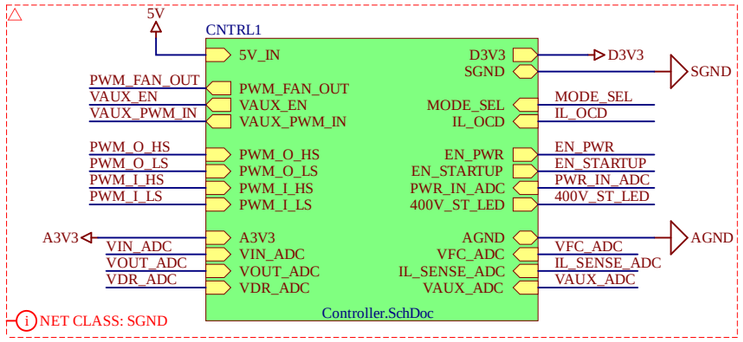

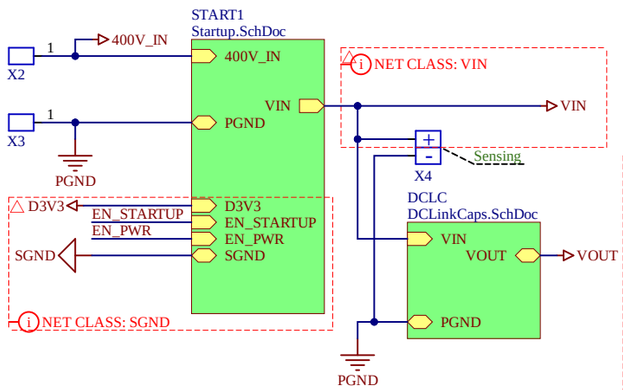

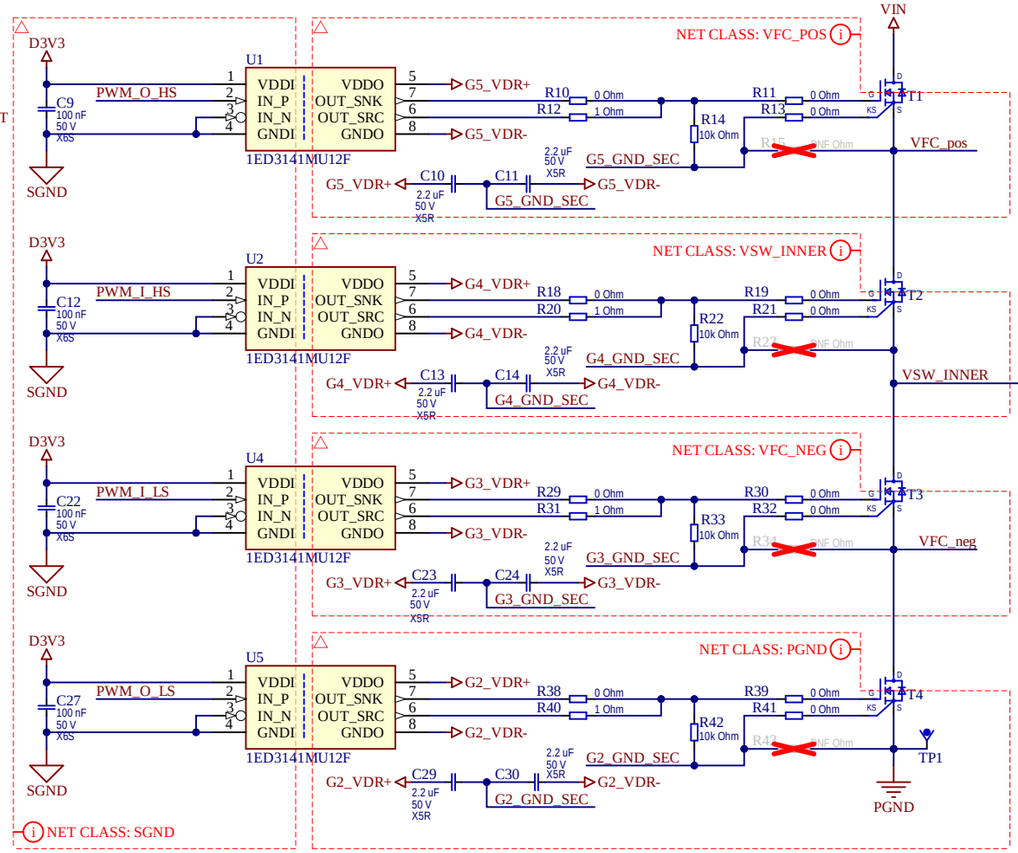

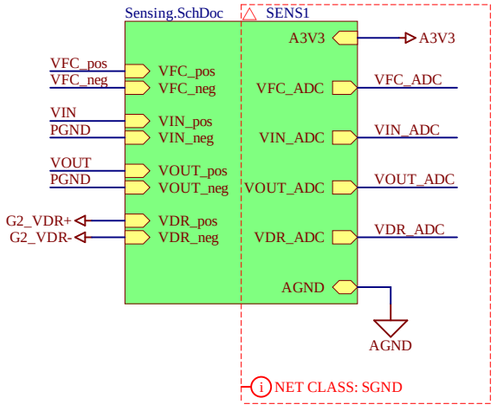

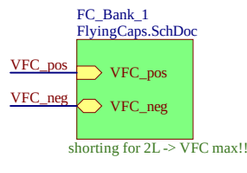

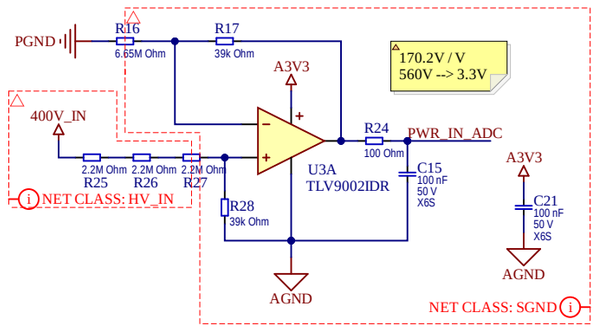

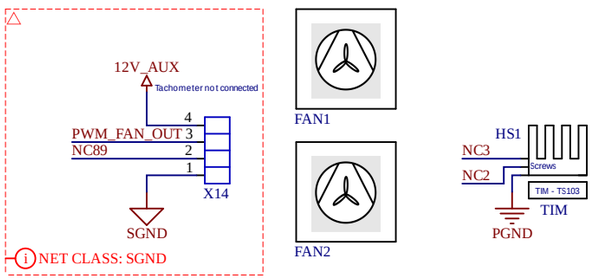

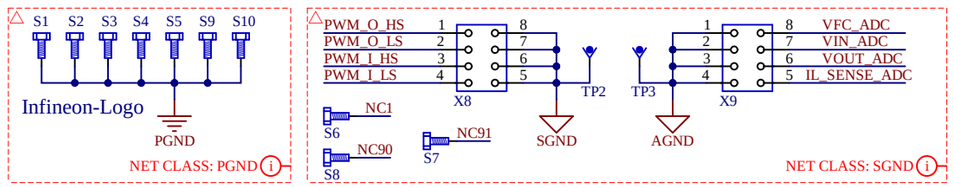

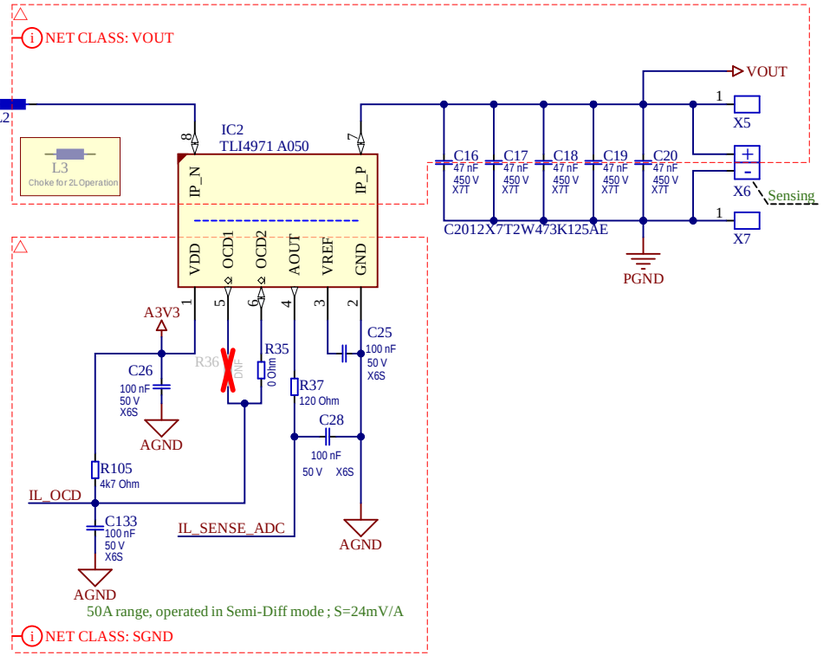

Project: *REF_10KW_3LBUCK_SiC400*			Version: *v1.11*
PCB-Var.:			
Size: A3	Number:*	Assembly-Var.:	
Date: 15.05.2025	Time: 11:39:40	Sheet 1 of 7	
File: C:\Users\Jagannath\Documents\REF_10kW_3LBUCK_SiC400\TopSheet.SchDoc			

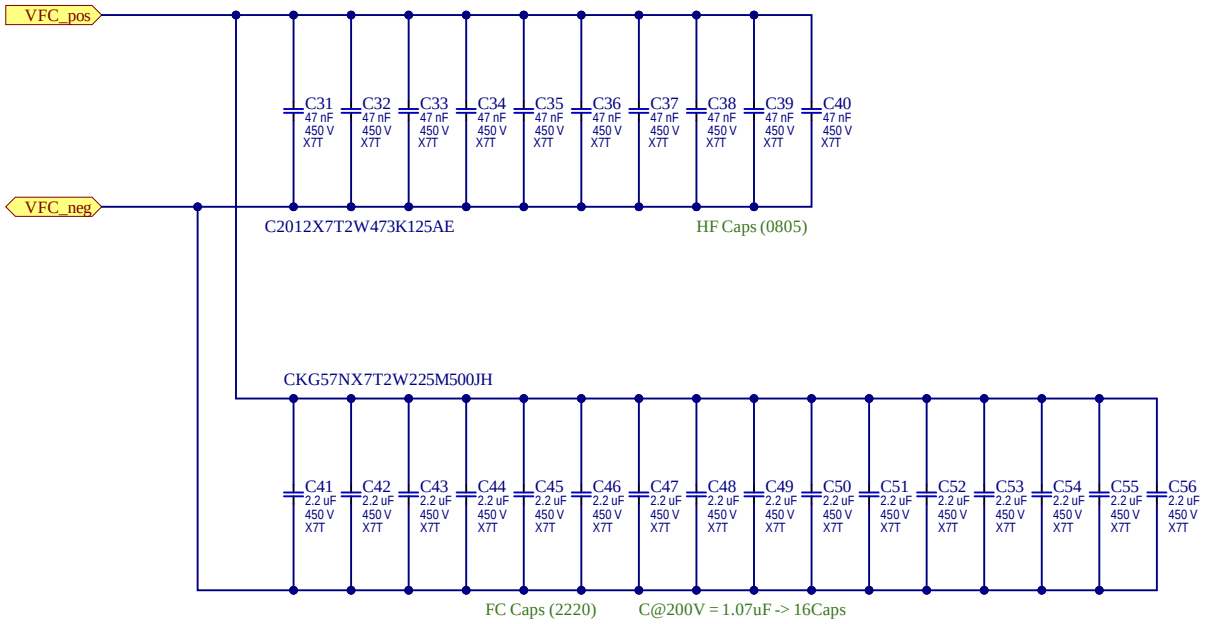

$$\Delta V_{C(FLY)} = I_{LOAD} \times (0.5 - |D - 0.5|)/(C_{FLY} \times f_{SW}) \quad (2)$$

$$\Delta I_{C(FLY)\text{-}RMS} = [2 \times (0.5 - |D - 0.5|) \times (I_{LOAD}{}^2 \times + \Delta I_L{}^2/12)]^{0.5} \quad (3)$$

Design for 10% WC Ripple at 32.5kHz, 20Amps Load, D=0.5 -> C=15uF

Project: ***REF_10KW_3LBUCK_SiC400***			Version: ***v1.11***
PCB-Var.:			* * * * *
Size: A4	Number:*	Assembly-Var.:	
Date: 15.05.2025	Time: 11:39:40	Sheet 2 of 7	
File: C:\Users\Jagannath\Documents\REF_10kW_3LBUCK_SiC400\FlyingCaps.SchDoc			

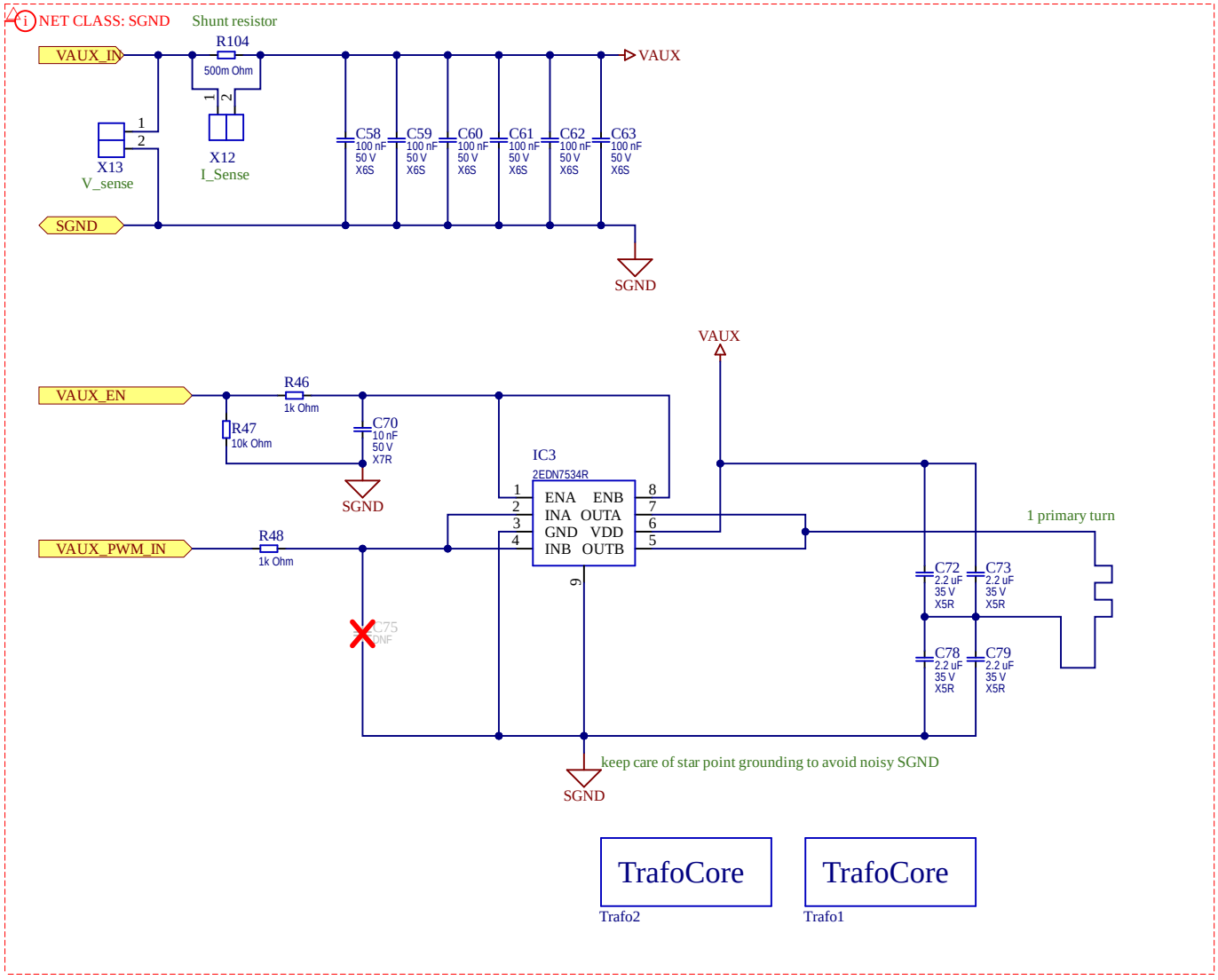

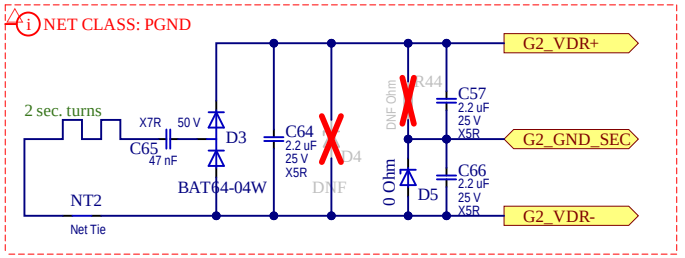

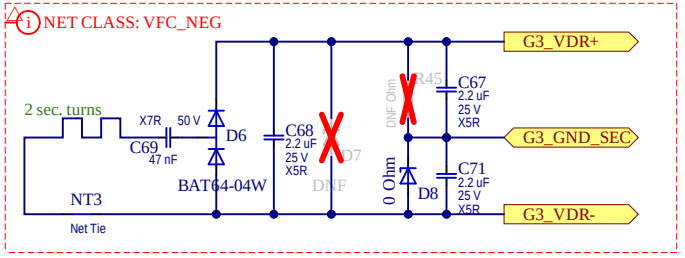

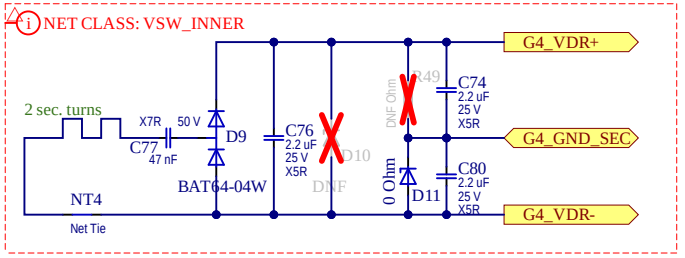

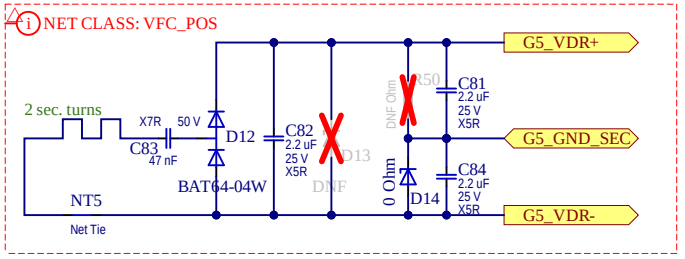

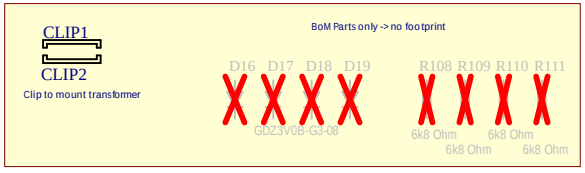

Project: *REF_10KW_3LBUCK_SiC400*			Version: *v1.11*
PCB-Var.:			
Size: A4	Number:*	Assembly-Var.:	
Date: 15.05.2025 Time: 11:39:40		Sheet 3 of 7	
File: C:\Users\Jagannath\Documents\REF_10kW_3LBUCK_SiC400\GateDriverSupply.SchDoc			

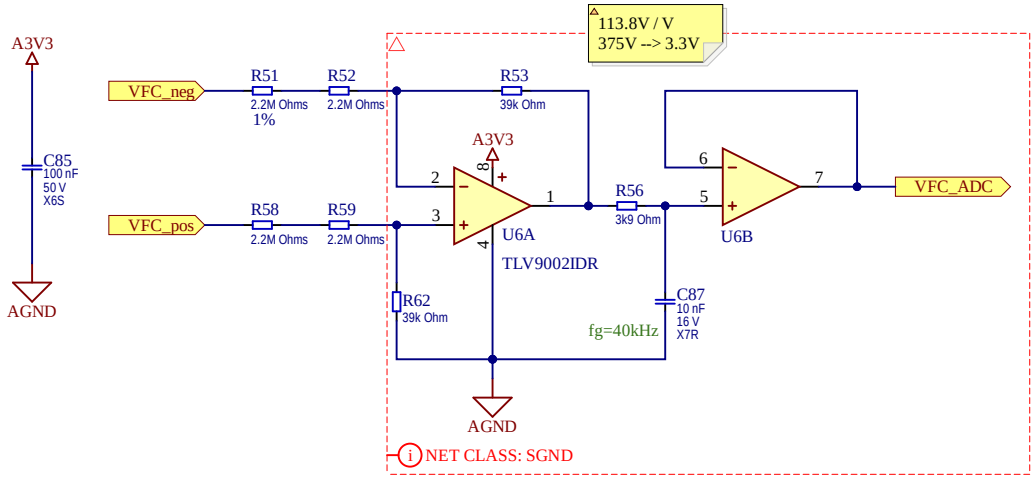

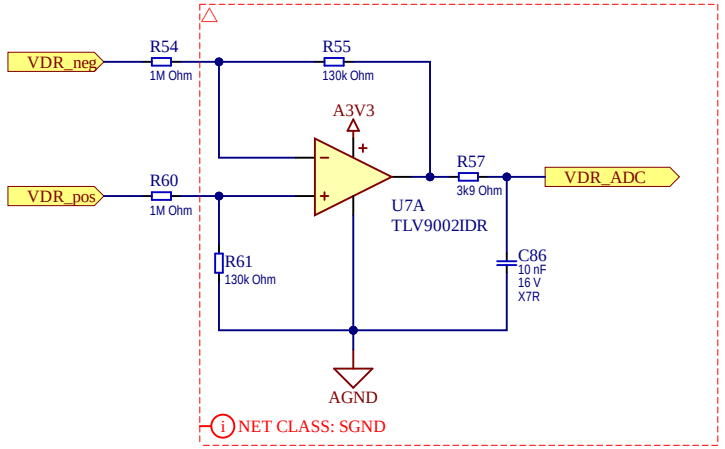

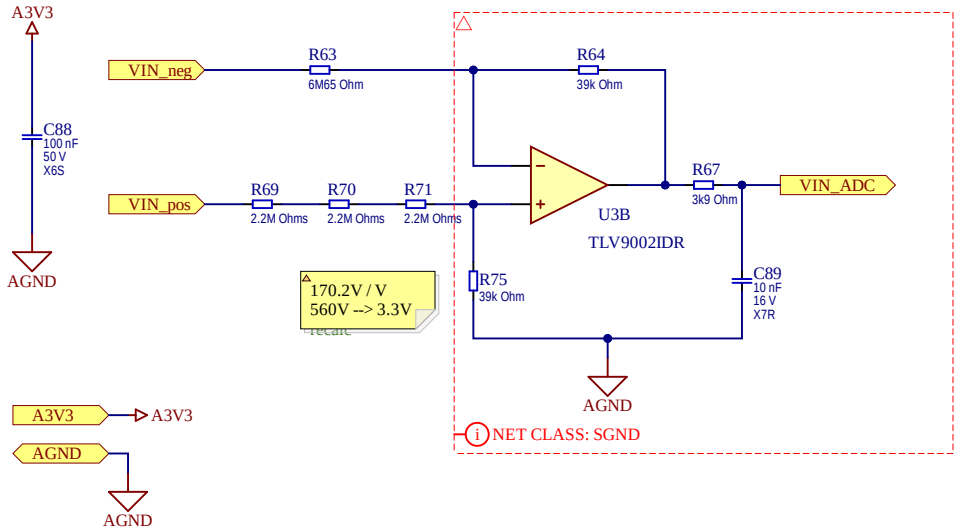

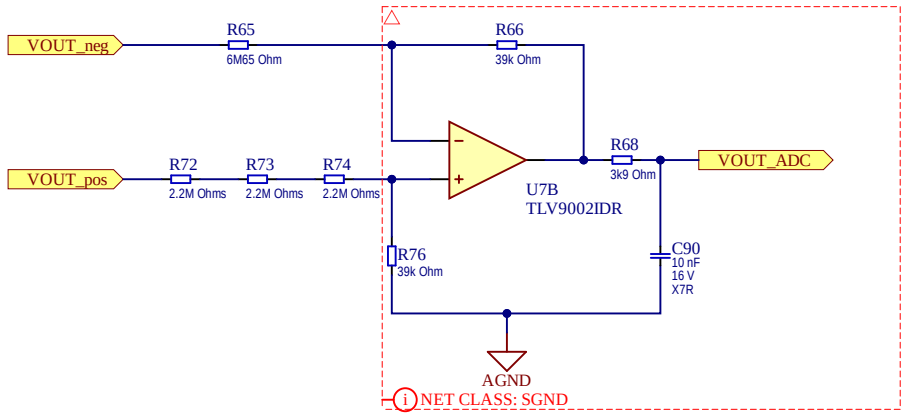

Project: *REF_10KW_3LBUCK_SiC400*			Version: *v1.11*
PCB-Var.:			
Size: A4	Number:*	Assembly-Var.:	
Date: 15.05.2025	Time: 11:39:40	Sheet 4 of 7	
File: C:\Users\Jagannath\Documents\REF_10kW_3LBUCK_SiC400\Sensing.SchDoc			

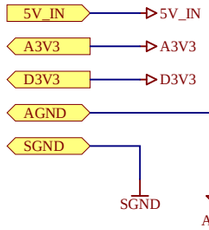

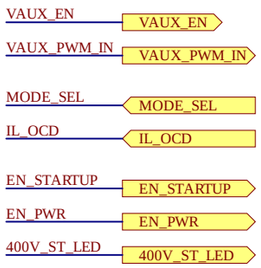

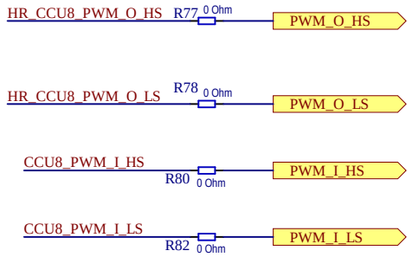

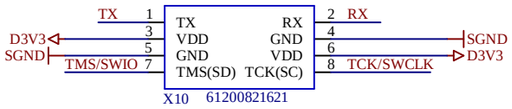

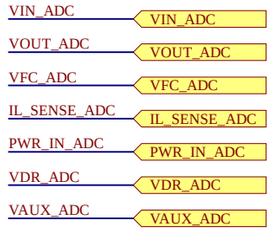

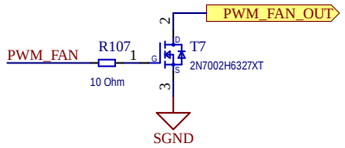

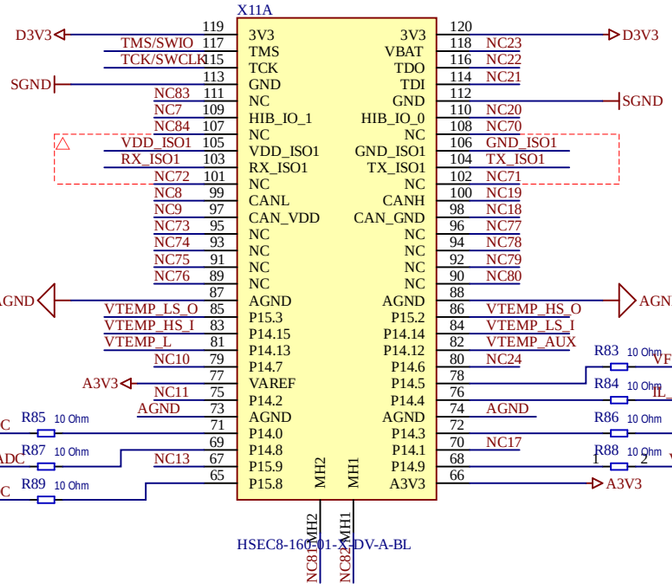

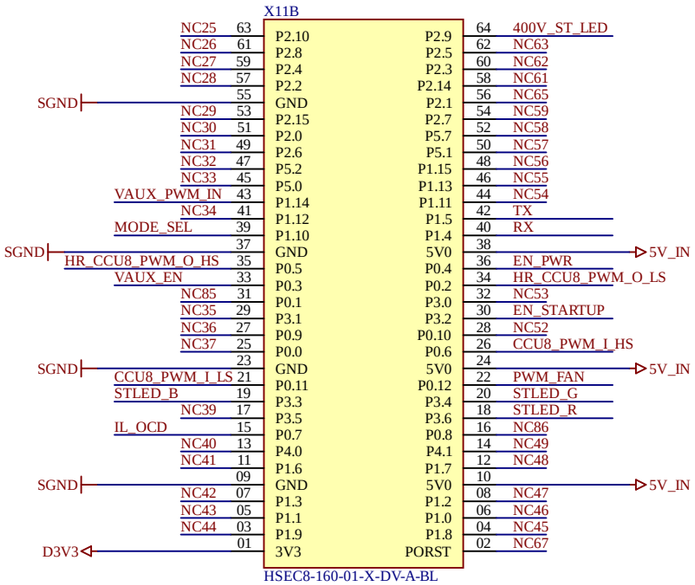

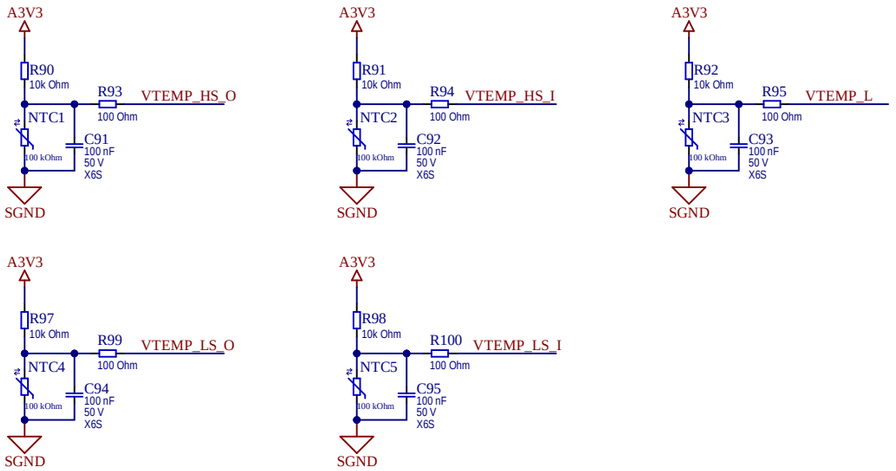

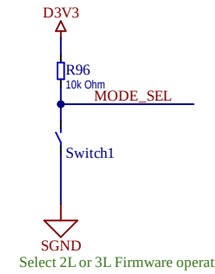

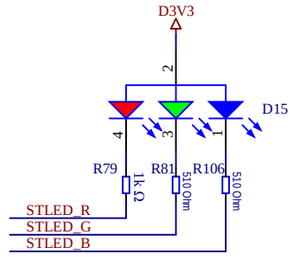

Project: *REF_10KW_3LBUCK_SiC400*			Version: *v1.11*
PCB-Var.:			* * * * *
Size: A3	Number:*	Assembly-Var.:	
Date: 15.05.2025	Time: 11:39:41	Sheet 5 of 7	
File: C:\Users\Jagannath\Documents\REF_10kW_3LBUCK_SiC400\Controller.SchDoc			

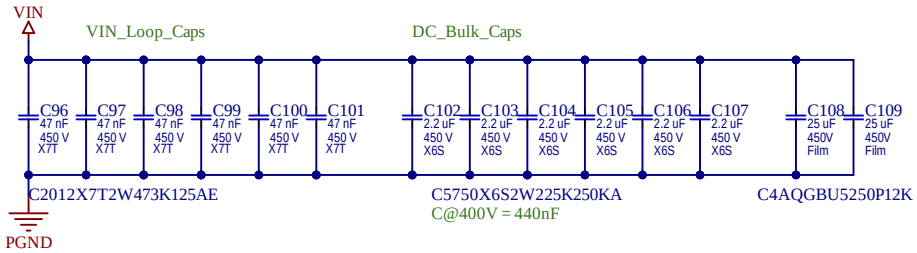

$$C_{in} \geq \frac{(1-D)\cdot D\cdot I_{out,max}\cdot \eta}{\Delta V_{C,in}\cdot f_{sw}}$$

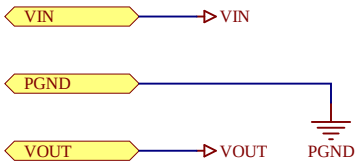

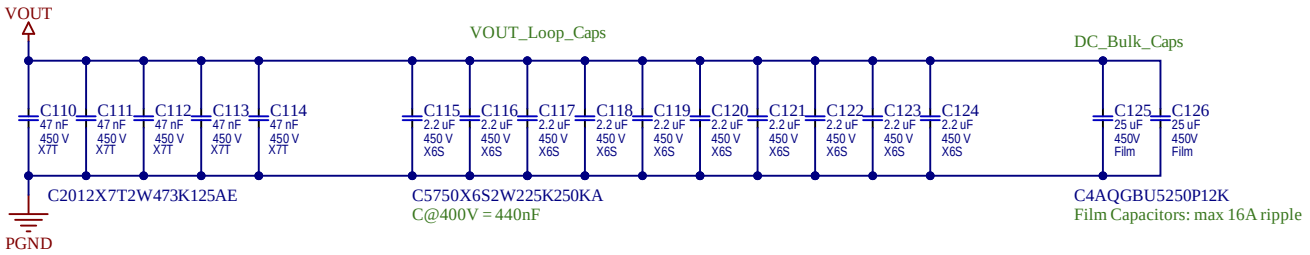

$$C_{out} = \frac{\Delta i_L}{8\cdot f_{sw}\cdot \Delta V_{out}}$$

Iripple = 0.3*20A ; fsw = 2x32.5kHz ; dVout=0.01*400V

Cout = 2.8uF

Project: ***REF_10KW_3LBUCK_SiC400***			Version: ***v1.11***
PCB-Var.:			* * * * *
Size: A4	Number:*	Assembly-Var.:	
Date: 15.05.2025	Time: 11:39:41	Sheet 6 of 7	
File: C:\Users\Jagannath\Documents\REF_10kW_3LBUCK_SiC400\DCLinkCaps.SchDoc			

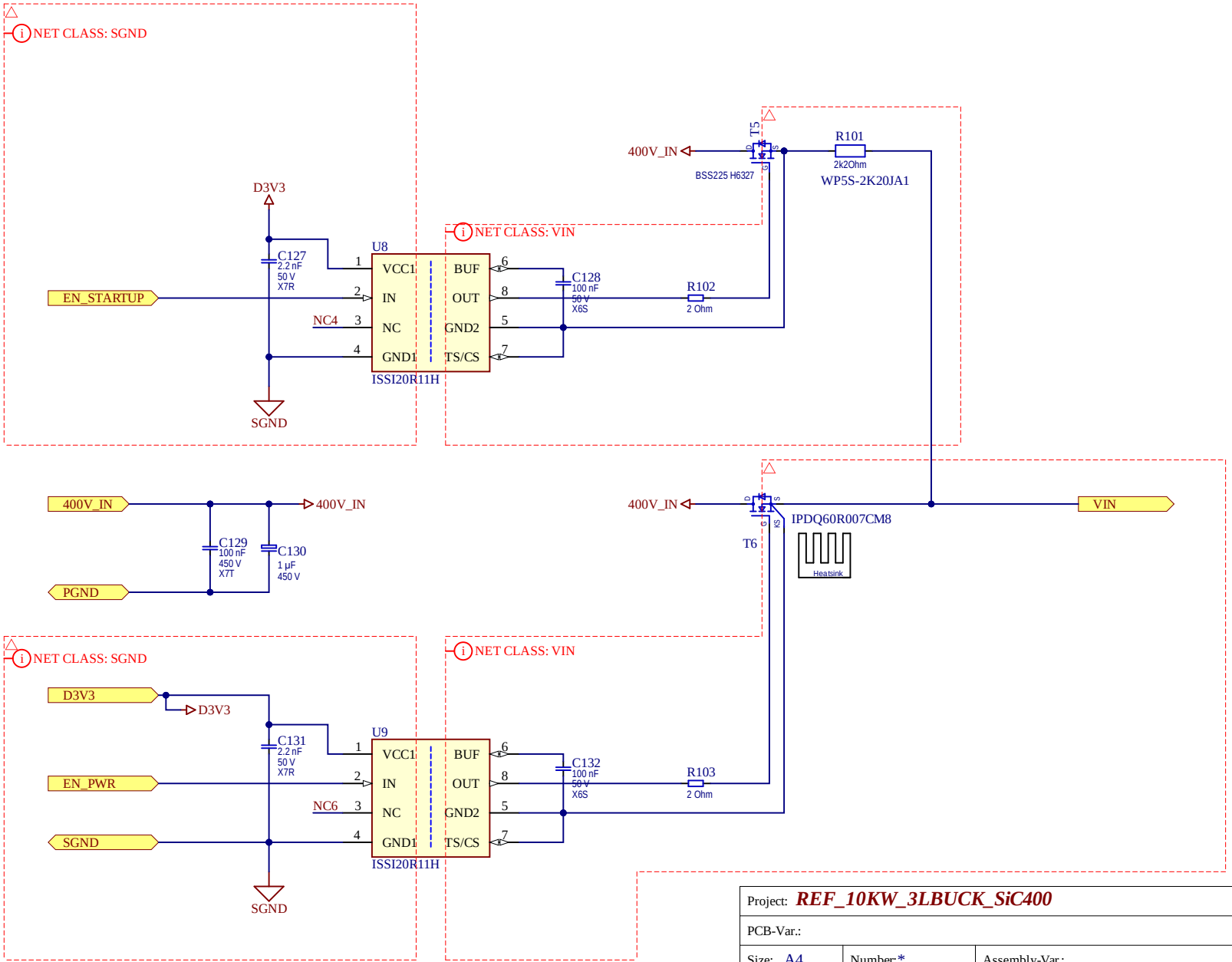

Project: *REF_10KW_3LBUCK_SiC400*			Version: *v1.11*
PCB-Var.:			
Size: A4	Number:*	Assembly-Var.:	
Date: 15.05.2025	Time: 11:39:41	Sheet 7 of 7	
File: C:\Users\Jagannath\Documents\REF_10kW_3LBUCK_SiC400\Startup.SchDoc			